□□□□□□□□□□□□□□□□□□□□□□□□□□ □□ mamadecor.ua

NANO S TRIMLESS
01.3901.8

POWER: 8W
input: 700mA

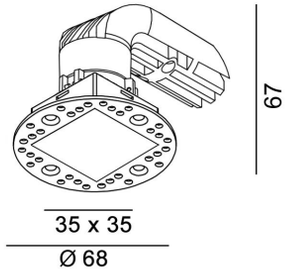

SAFETY INSTRUCTIONS

- The appliance should be installed, connected and tested by qualified electrician, and in accordance with local regulations.
- Turn off the power supply before installation or maintenance of the appliance, and make sure that the cables will not be squeezed or damaged by sharp edges.
- The appliance should not be covered by insulation blankets or similar materials .
- Clean the appliance with a soft cloth and a standard PH neutral detergent.Stainless steel surfaces should be maintained regularly.
- Misuse of, or changes to the appliance shall nullify the guarantee.The manufacturer is free to change the design, specifications and instructions for assembly.

⚠ DO NOT CONNECT THE APPLIANCE DIRECTLY TO HIGH-VOLTAGE POWER SUPPLY IF DRIVER IS NOT CONNECTED.

USE THE CORRECT DRIVER TO CONNECT.

DO NOT TOUCH OR CLEAN THE LED ARRAY!
IN ORDER TO AVOID DAMAGING THE LED CHIP!

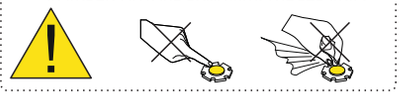

CE F III IP20

Option 1

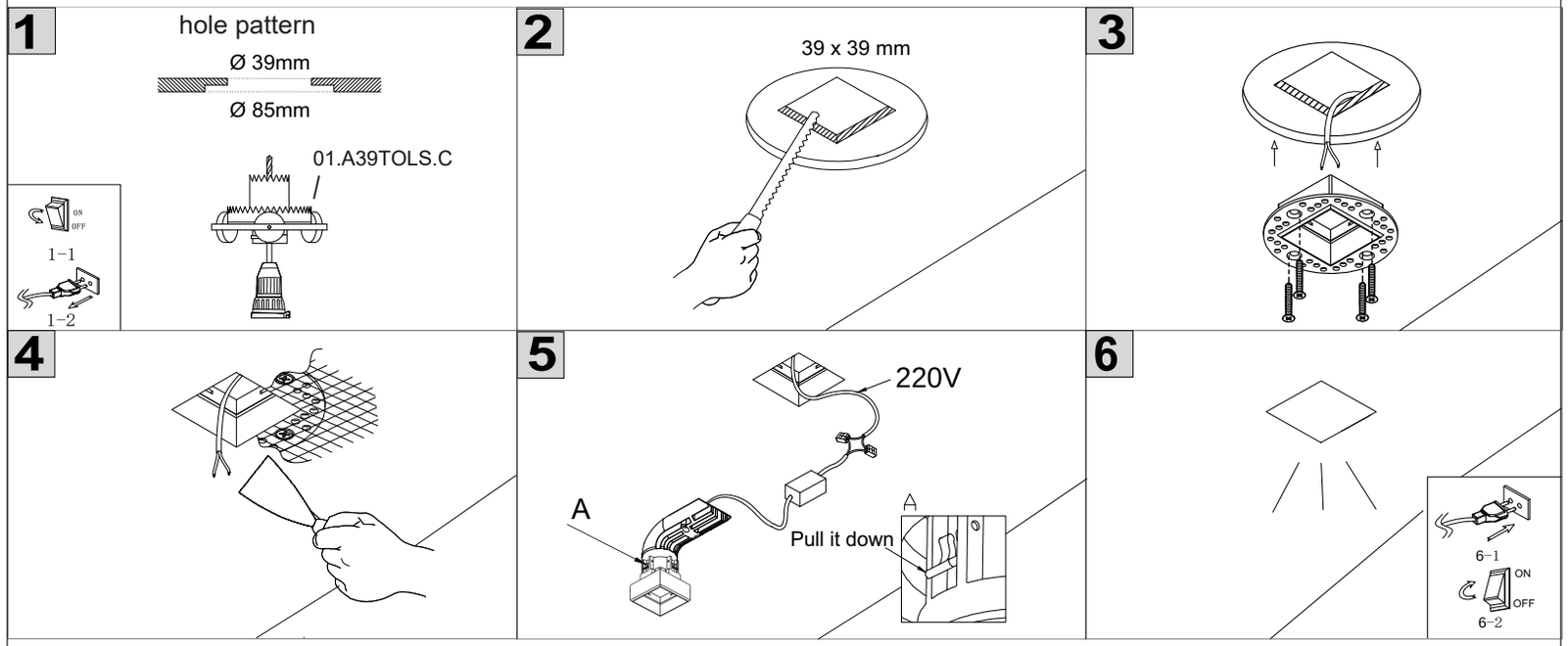

Option 2

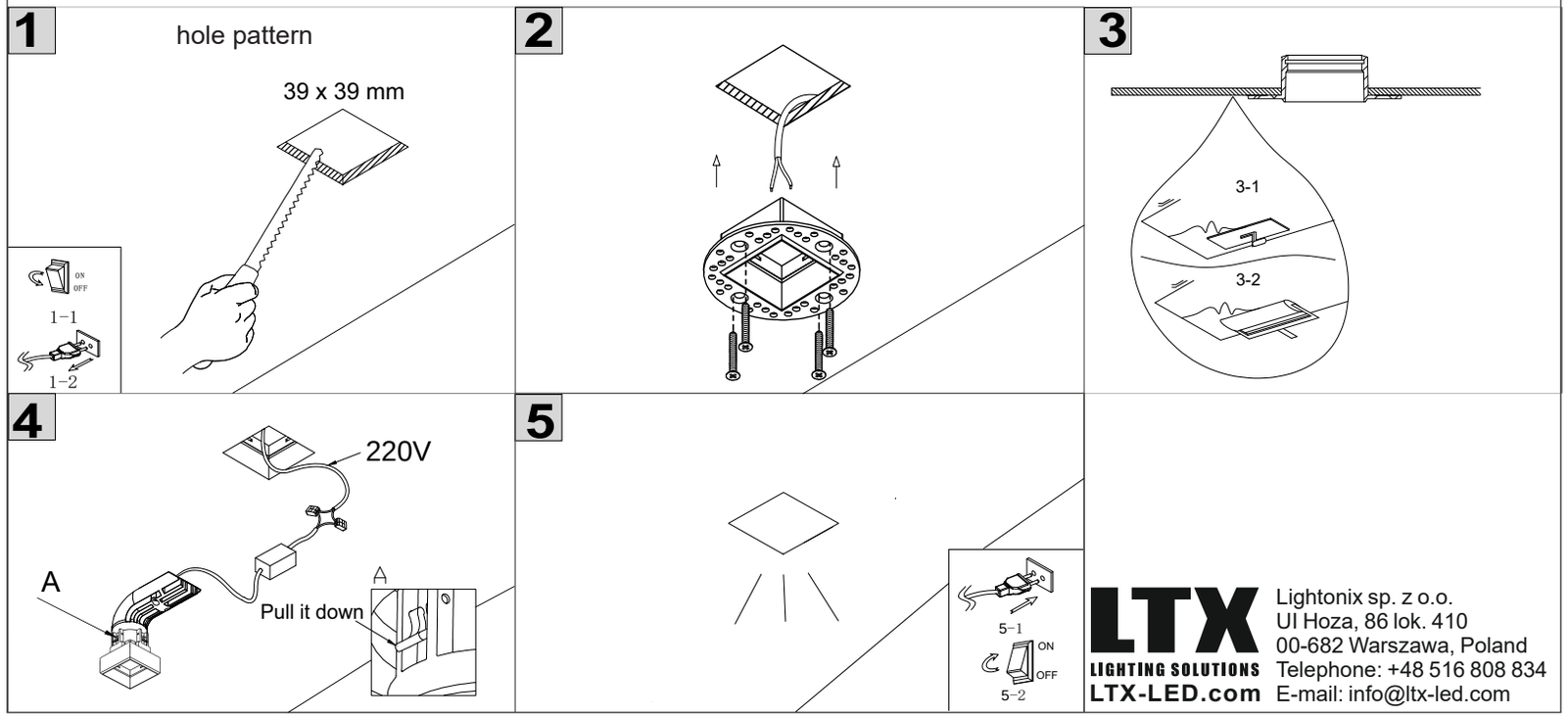
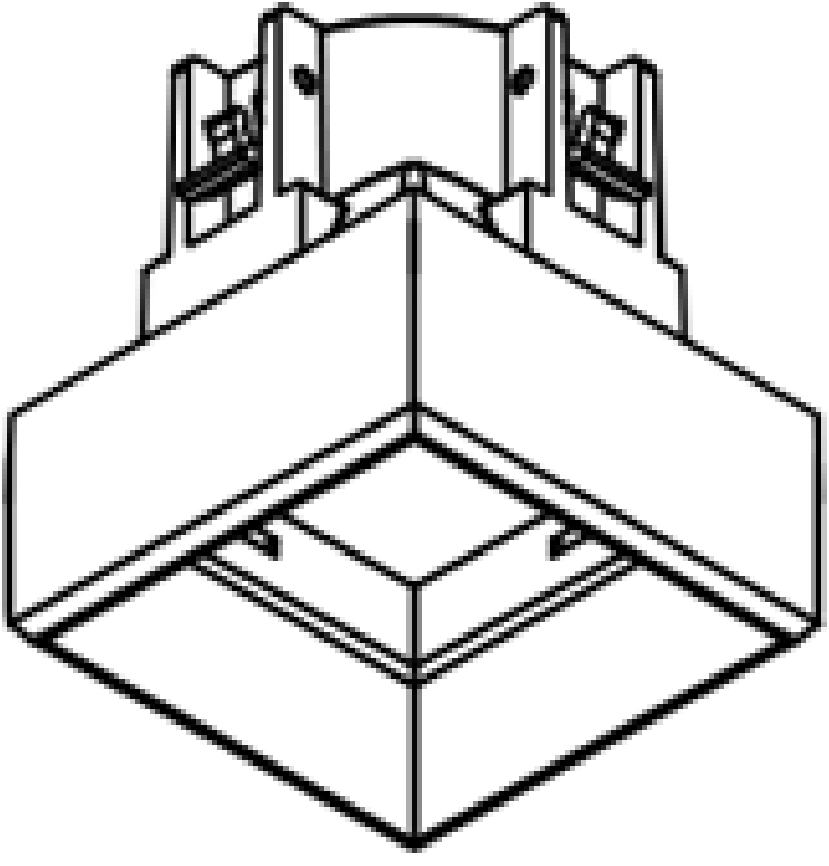
LTX
LIGHTING SOLUTIONS
LTX-LED.com
Lightonix sp. z o.o.
Ul Hoza, 86 lok. 410
00-682 Warszawa, Poland
Telephone: +48 516 808 834
E-mail: info@ltx-led.com