Завантажено з mamadecor.ua

NEW

White
2020644001

Black
2020644003

Black
83213003

Nexus by Bønnelycke mdd

Masterbox	Qty 2
Size	H: 140,8 cm, Shade Ø: 10 cm, Pipe Ø: 12,7 cm, Base Ø: 26 cm, Tilt angle: 90°
Material	Metal/Plastic
IP Class	IP20, Class 2
Cable	Textile cable: White/Black 250 cm
Light source	GU10, Max. 6W, Excl. light source

Spider by Bønnelycke mdd

Masterbox	Qty 2
Size	H: 47,5 cm, Shade Ø: 27,5 cm
Material	Metal
IP Class	IP20, Class 2
Cable	Textile cable: Black 300 cm non replaceable
Canopy	Color: Black, Material: Plastic Ø: 11,5 cm, H: 8,2 cm
Light source	GU10, Max. 8W, Incl. 4X1.5W LED, Lumen 4X480, Kelvin 2700, Life hours 20.000, RA 80, Dimmable Light source energy class A+

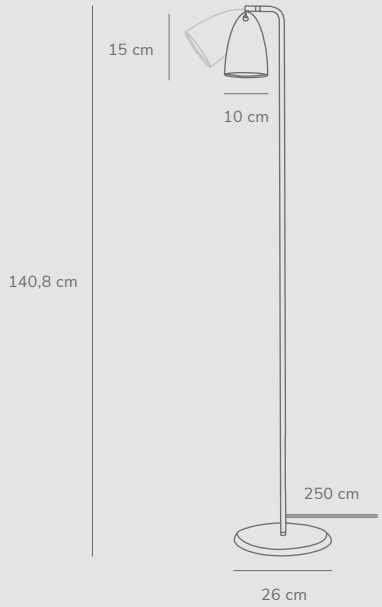

Features
Minimalistic and timeless design
Beautiful brass swivel tilt joint
Satin matt finish
BIM file available

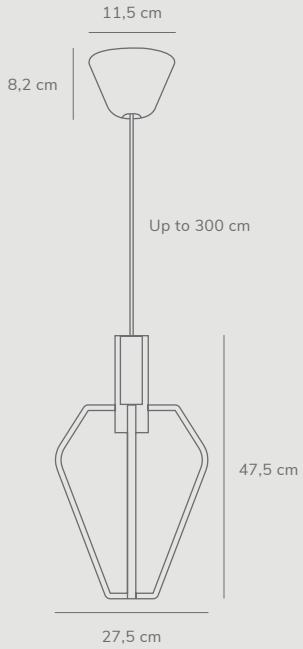

Features
Sculptural and futuristic design
Beautiful alone or in clusters